LET	ALTERATION	DATE	BY	LET	ALTERATION	DATE	BY
				A	ON 5/12 CHANGE -0 ASSY TO -0 L/R ASSY, NO WT. CHG.	1-4-43	[illegible]

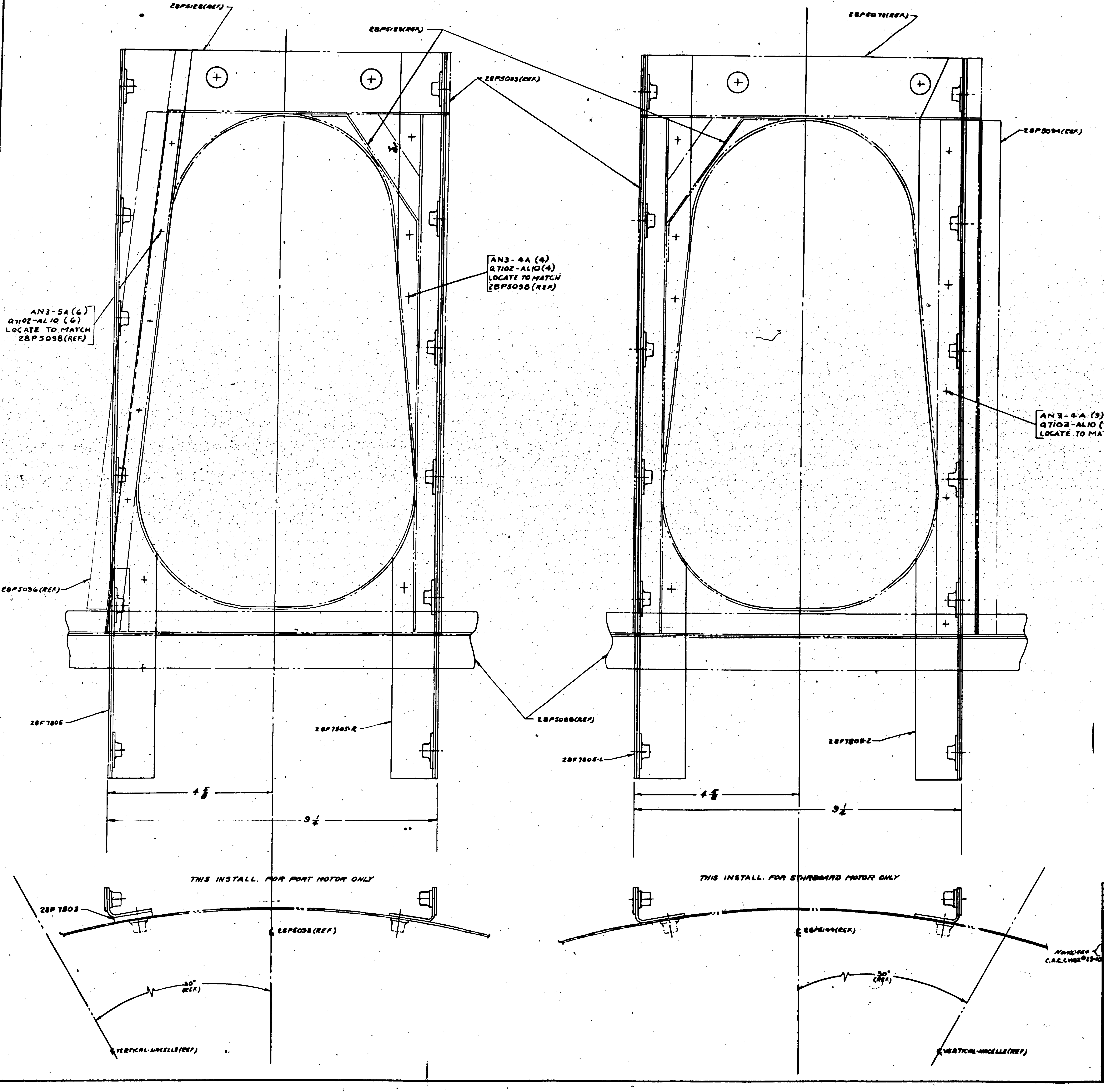

PART NO.	STOCK	MATERIAL	SPEC.	-0 REQ	-2 REQ	-3 REQ	-4 REQ	-5 REQ
Q7102-AL10				10 9				
AN3-5A				6				
AN3-4A				4 9				
28F7805-L				1				
28F7805-R				1				
28F7803				1				
28F7806				1				
28F7806-2				1				

PARTS LIST FOR ASSY.

EFF.	MODEL	NEXT ASSY.	REQ
R	PBY-5A	28F4700	1
L	PBY-5A	28F4700	1
R	PBY-5	[illegible]	1
L	PBY-5	[illegible]	1

REQUIREMENTS FOR AIRPLANE

Nom(s) 464, C.A.C. CHGE® 23-10

SCALE 12" = 1'0"

A.S.

HEAT TREAT: ABOVE — FINISH: ABOVE

NAME INSTALL-FURN-SUPPORTING ANGLES-HEAT EXCH.-FAIRING

CONSOLIDATED AIRCRAFT CORP. SAN DIEGO, CALIF.

J 28F7802

28F7802

28F7802 R 12/7/42

H 432